DKJ MODEL ELECTRIC ACTUATOR

OPERATION MANUAL

Rich self diagnosis and protection function

Accurate positioning of adaptive resistance variations

Jiangsu Lianggong Actuator Co., Ltd

I. Description

DKJ electric actuator is a new type of integrated intelligent controller with high performance price ratio and popularity. The circuit board is smaller in size and the transmitter housing can be directly installed in the original position, instead of the conventional position transmitter and servo amplifier. DKJ type electric actuator can drive single-phase motor (DKJ-II type), and also can drive three-phase motor (DKJ-I type). Set and operation all through the button and switch to implement, simple and practical. Compared with analog integrated controller, intelligent controller has the following advantages:

1、Extensive fault detection and protection capabilities minimize the use of risk

2、The adaptive resistance positioning software greatly improves the positioning accuracy

3、Set all through button operation, without adjusting potentiometer, setting is extremely simple。

II. Main Function

1. The protection function of the given signal failure judgement

The given signal wire open circuit, short circuit, beyond the normal range, it will send the alarm signal, and according to the user selected failure processing mode (full open, full closed, keep) automatic control valve position.

2. Protection function of position transmitter signal failure judgement

Position sensor lead fault, itself damage, can immediately cut off the motor power supply, and alarm.

3. Valve clamping and handling function

When a jam occurs, the controller controls the motor to rotate in a small step in the opposite direction, and then runs in the same direction. If the jam disappears, turn to normal operation. If the jam phenomenon continues, then repeat back, move forward. If the three time after the retreat, the jam disappeared, according to the normal processing; if can not disappear, then turn off the motor power supply, and alarm.

4. Over temperature protection of motor (temperature switch action)

Cut off the motor power. After the temperature is lowered, automatically resume work

5. Mechanical limit (limit switch action)

20mS cut off the motor power.

6. Automatically adjust the direction of motor rotation function

Automatically identify the direction of motor rotation, and automatically adjust to the required direction

7. Instant anti reverse function

Ensure that the motor is stopped before it can start reverse

8. Precise positioning function

A unique adaptive algorithm is used to determine the time when the motor signal is stopped in advance, and the positioning accuracy is greatly improved. For t wear of the brake mechanism of the actuator, load torque changes, and so on, the adaptive positioning software can ensure accurate positioning, greatly reducing the basic error

9. Electrical limiting function

Electrical setting valve midway limit position. It can also replace the mechanical limit (or simultaneous action) as the actuator's on / off limit protection

10. Automatic adaptation of positive / reverse operation mode function

It can automatically determine the running direction of the on / off valve according to the user's definition.

11. Local manual operation function

By operating the buttons on the panel, you can directly control the opening and closing of the motor on the spot

III. Model and Specification

Model	Shaft Thrust N/m	One-turn time/s	Effective displacement
DKJ-210	100	100 ± 20%	0-90°
DKJ-310	250		
DKJ-410	600		
DKJ-510	1600		
DKJ-610	4000		
DKJ-710	6000		

IV. Main Technical Indexes

1. Adjust (given) an input signal: 4～20mA; input resistance 120Ω.

2. Reverse signal output: 4～20mA; Output load resistance ≤750Ω.

3. Sensitivity: 0.025% (1 / 4096).

4. Dead band: 1.5%.

5. Positional error: ≤±1%.

6. Damping characteristic: no oscillation

7. Hysteresis: no greater than 0.2S.

8. Power supply: single phase motor: AC220V±10%; three-phase motor: AC380V±10%.

9. Motor drive current: 10A / 20A / 40A optional.

10. Electrical limit range: Off limit: 0～100%; Open limit: 0～100%

12. Input switch signal: mechanical open limit, mechanical limit, over temperature

13. Display precision: 0.2 level.

14. Operating ambient temperature: - 25～80℃.

15. Ambient humidity: ≤95%RH。

V. Wiring

see Appendix

VI. Use

DKJ model actuator is divided into "running" and "setting" two working modes. Switch by operating the switch on the key board. Before being put into use, the user must set the actuator according to its own usage (if you later need change the wiring or the working condition, you need to reset it). After the setup is complete, it can be put into operation.

1. Setting

Set up by operating the button board. Set up the operation panel as shown below:

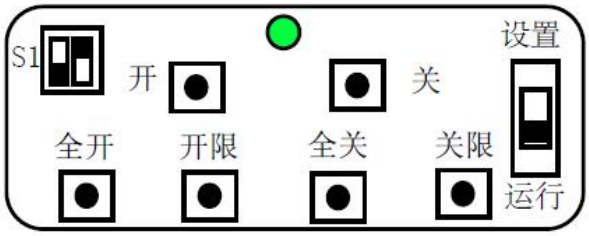

Before setting, a 4 ~ 20mA adjustable current source shall be connected at the input of the given current; A 20mA ammeter is applied at the output current of the reverse current. The setup process is as follows:

1) Entering setting

Before entering the setting, you must ensure that all wiring is correct, the position sensor (potentiometer) installation position is correct, otherwise the settings can not be normal.

Put the “setting / running” switch in the setting position and turn on the power supply. The indicator light is green at this time.

2) Fully open, fully closed calibration

Press the "on" or "off" key on the operating board and transfer the actuator to the fully opened position of the valve, , Press the "on" or "off" key on the operating board and transfer the actuator to the fully opened position of the valve. Press the "on" or "off" key on the operating board and transfer the actuator to the fully opened position of the valve, actuator to the “full close” valve, Press the button on the board "full close" button, keep about 5 seconds, when the light turns red, can release the button, the indicator light turns back to green, fully closed position calibration is completed.

Fully open, fully closed order without calibration requirements. When the calibration is completed, the counter current meter shall be observed, the opening, closing, and reverse current of the key operation Executor shall be changed according to the opening of the valve.

3) Open limit, Off limit setting

Press the manual key to operate the actuator to the opening limit position of the valve, press the "open limit" button to keep the indicator light red, loosen the button, turn the indicator green, and set the limit setting。Then transfer the actuator to the "off limit" position, press the "off limit" button, hold the indicator light to red, loosen the button, turn the indicator back green, and set the limit setting.

Open limit, off limit, set order is not required.

4) Setting of valve position after failure of given signal

If the given signal failure (lead circuit, short circuit or current exceeds the normal range), users can choose the required valve stop failure position--open / close / keep in situ. Select the switch through the DIP S1, switch position and valve position corresponding to

the following figure shows:

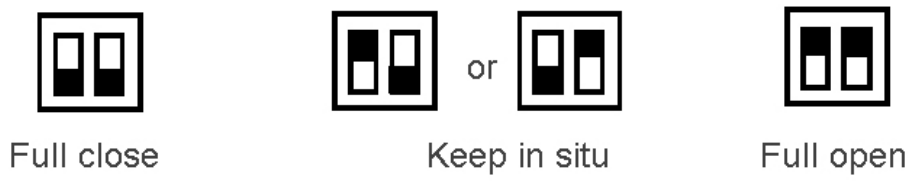

5) Exit Setting

After the above setting step is completed, use the "on" and "off" button to drive the valve to the middle position, then put the "set / run" switch to the running position, that is, to exit the setting and enter the running state.

2. Running

Enter the running state, the movement of the actuator will be controlled by the given current. Given the current changes in the range of 4 ~ 20mA, the corresponding valve opening in 0 (full closed / close limit) to 100% (full open / open limit) change.

VII. Error Correction

1. Output current error correction

DKJ model actuator has been corrected in the factory before delivery, the general users without correction. If the reverse output is not 4.00mA + 0.5%FS when the valve is fully closed, or reverse output is 20.00mA + 0.5%FS when the valve is fully open, the output current should be corrected. The correction measures are as follows:

The reverse output is connected to the ammeter. Put the settings / run switch on the set position and then turn on the power。Press the "all open" button, press the "open" button within 2 seconds, turn the indicator red, and release the two button at the same time, then enter the 4mA correction. Observe the current meter. Press the "full open" button to increase the output current, press the "open limit" button to reduce the output current. Through the "fully open", "open limit" key, the output current is adjusted to 4.00mA. Press the "full close" button, the light turns green, delay two seconds, turn red，means exiting 4mA correction and entering 20mA correction。Observe the current meter，The operation with the same 4mA correction, the output current 20.00mA. click the "full close" button, the light turns green, means correction is completed.

Put the settings / run switch to the running position, or enter the running state.

2. Calibration of given input current

If the valve position is not in accordance with the given current in the running state, it is necessary to re calibrate the input current:

At the given current input, a DC current source is connected and adjusted to 20.00mA. Put the settings / run switch to the set position and then turn on the power. Press the "full close" button within 2 seconds, press the calibration "off limits" button, enter the input signal calibration. The indicator light is red at this time. Press the "off limit" button to hold for about 5 seconds. Wait until the indicator turns green. Release the button, and the calibration is complete.

After the error correction, the "set / run" switch should be put back to the running position, which will be out of the correction and enter the running state.

Note: when the settings are complete or error correction setting the set / run switch from the set state to the running state, DKJ actuator will automatically adjust the direction of motor rotation according to the user's scheduled travel direction. The drive motor stops for about 2 seconds and then goes into running state. If the motor is not connected at this time, or the potentiometer or wiring of the position detection is incorrect, the motor direction will not be adjusted. At this time, the indicator light red / green alternating change. In case of this phenomenon, the power supply should be cut off and the trouble should be eliminated. If the motor is not turned, check the motor wiring. If the motor is turned on, check that the potentiometer wiring and installation position are correct. You could set the "set / run" switch to the set position, press the manual "turn on" / "off" button to turn the motor on, monitor the output voltage of a potentiometer with a multimeter, and check to see if the motor is rotating properly. After troubleshooting, set the "set / run" switch to the set position, get on power and then put it in the running position. If there is no change of the indicator red / green, it indicates that it has entered the normal running state.

VIII. Actuator Configuration & Mounting Size

See next page

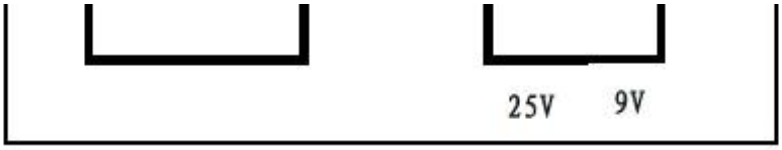

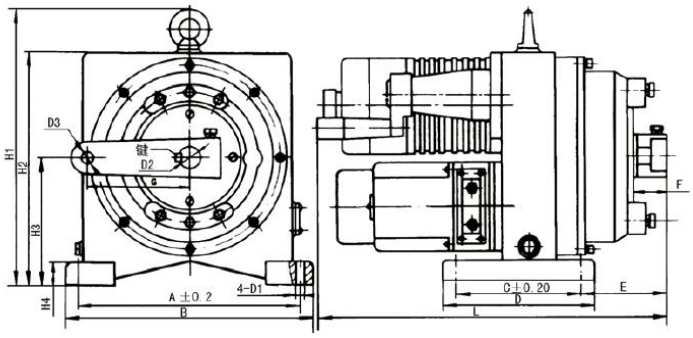

DKJ Model Actuator configuration and mounting dimensions

型号 Type	A	B	C	D	E	F	G	H_1	H_2	H_3	H_4	L	D_1	D_2	D_3	键 Key	重量 W (Kg)
DKJ-210	220 ± 0.2	245	130 ± 0.2	158	86	35	100 ± 0.2	270	233	128	20	360	Ø12	Ø25	Ø14 δ 15	8×7	31
DKJ-310	260 ± 0.2	300	100 ± 0.2	130	115	50	120 ± 0.2	307	260	135	20	445	Ø13	Ø35	Ø16 δ 21	10×8	48
DKJ-410A	260 ± 0.2	300	100 ± 0.2	130	115	50	120 ± 0.2	307	260	135	20	445	Ø13	Ø35	Ø16 δ 21	10×8	48
DKJ-410	320 ± 0.2	365	130 ± 0.2	162	142	60	150 ± 0.2	380	322	170	30	565	Ø14	Ø40	Ø18 δ 23	12×8	86
DKJ-510A	320 ± 0.2	365	130 ± 0.2	162	142	60	150 ± 0.2	380	322	170	30	565	Ø14	Ø40	Ø18 δ 23	12×8	86
DKJ-510	390 ± 0.2	424	180 ± 0.2	212	121	80	170 ± 0.2	440	379	196	35	640	Ø14	Ø48	Ø20 δ 25	18×11	145
DKJ-610A	390 ± 0.2	424	180 ± 0.2	212	121	80	170 ± 0.2	440	379	196	35	640	Ø14	Ø48	Ø20 δ 25	18×11	145
DKJ-610	430 ± 0.15	476	200 ± 0.5	240	140	100	170 ± 0.2	495	435	225	35	690	Ø14	Ø55	Ø30 δ 25	18×11	175
DKJ-710	510 ± 0.15	560	270 ± 0.5	320	165	110	215 ± 0.2	630	544	304	50	810	Ø22	Ø60	Ø30 δ 34	24×14	400

Appendix: DKJ wiring diagram

1. Main circuit board connection

The lead position of the main circuit board is shown below:

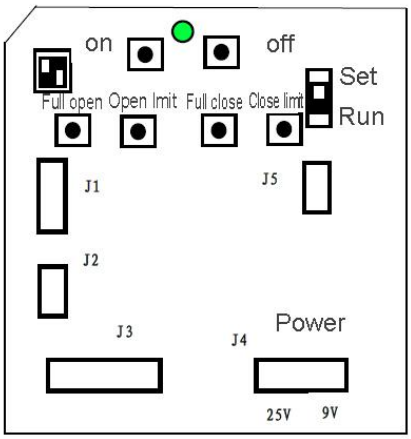

J1: stroke Mechanical limit, overheating signal input socket for motor

1——over temperature 2—— close limit 3——open limit 4——common port

J2: Potentiometer socket

1&3 is potentiometer fixed end lead；2 is slide end lead。

J3: Socket connected to a control system

1——given input + 2——given input -

3——reverse output + 4——reverse output -

5&6 is alarm and electrical output contact.

J4: Power transformer socket

1&2 AC26V 3&4 AC9V

J5: Solid state relay plate connecting socket

Insert the solid-state relay control signal plug.

2. Solid state relay wiring diagram

1) Single-phase solid state relay

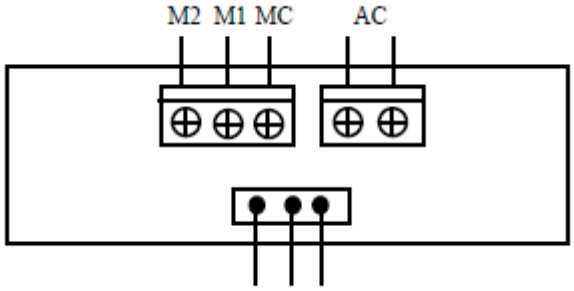

Single phase solid state relay panel, wiring terminal layout

Symbol	Definition	Connection	Symbol	Definition	Connection
M1	Motor connection 1	Motor	MC	Motor common end	Motor
M2	Motor connection 2	Motor	AC	AC 220V power	Power

2) Three-phase solid state relay

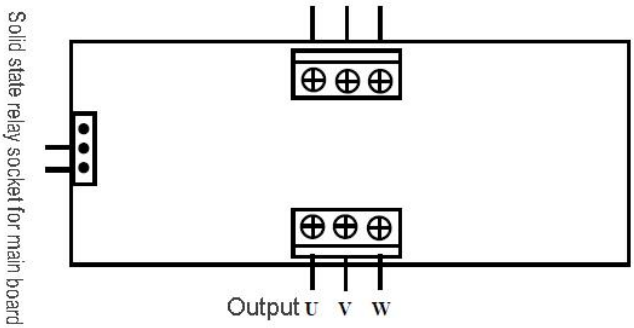

Terminal layout of three phase solid state relay panel

Lead symbol definition

Symbol	Definition	Connection	Symbol	Definition	Connection
A / B / C	Three phase power input	Power supply	U / V / W	Three phase power output	Motor

3. External wiring diagram

① Single phase 220V AC Power supply wiring diagram

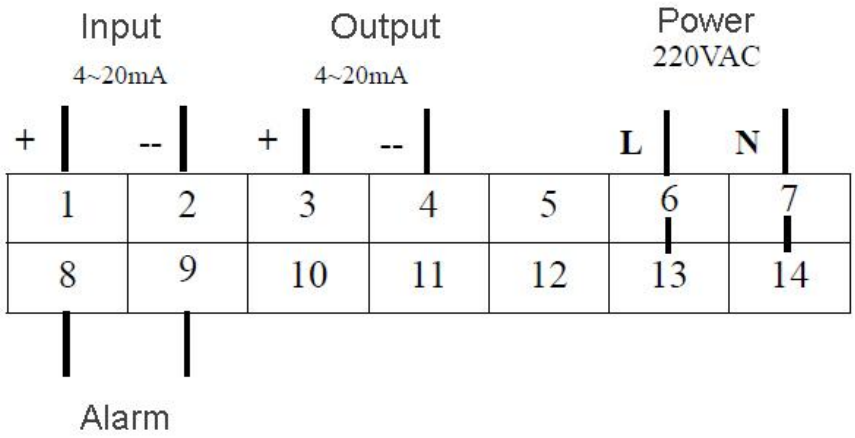

② Single phase 220V AC Wiring diagram of power supply terminal

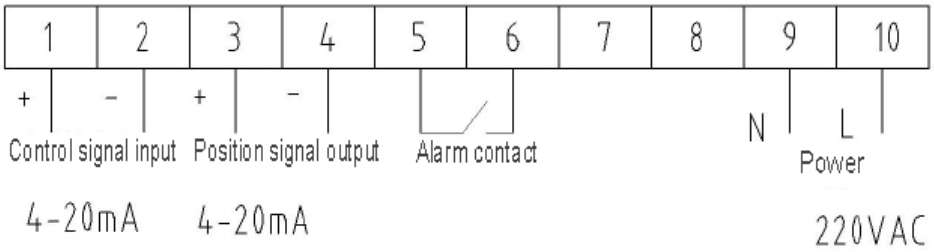

Note: any changes to this specification, without further notice!